STUDENT SUMMER INTERNSHIP TECHNICAL REPORT

Development of a Long-term Surveillance Unmanned Ground Vehicle (LTS-UGV) for Surveillance at the Hanford 200 Area

DOE-FIU SCIENCE & TECHNOLOGY WORKFORCE DEVELOPMENT PROGRAM

Date submitted:

December 15, 2023

Principal Investigators:

Brendon Cintas (DOE Fellow Student)
Florida International University

Dr. Douglas Reid (Mentor)
Washington River Protection Solutions

Ravi Gudavalli Ph.D. (Program Manager)
Florida International University

Leonel Lagos Ph.D., PMP® (Program Director)
Florida International University

Submitted to:

U.S. Department of Energy
Office of Environmental Management
Under Cooperative Agreement # DE-EM0005213

Applied Research Center
FLORIDA INTERNATIONAL UNIVERSITY

EXECUTIVE SUMMARY

The Chief Technology Office (CTO), in collaboration with Florida International University, introduces the Long-Term Surveillance Unmanned Ground Vehicle (LTS-UGV) for enhanced nuclear facility surveillance. This adaptable platform offers 360-degree vision, autonomous operation, and advanced data collection. The ongoing development plan includes improved vision, data collection, user interface, scalability, and system enhancements. Concurrently, the CTO explores off-the-shelf robotic systems like The Canary, a Clearpath Husky™ ground platform, which potentially reduces costs, enhances data reliability, and minimizes exposure risk through its autonomous and semi-autonomous workflows, contributing to more effective operations.

This research work has been supported by the DOE-FIU Science & Technology Workforce Development Initiative, an innovative program developed by the U.S. Department of Energy's Office of Environmental Management (DOE-EM) and Florida International University's Applied Research Center (FIU-ARC). During the summer of 2023, a DOE Fellow intern, Brendon Cintas, spent 10 weeks doing a summer internship at Washington River Protection Solutions (WRPS) under the supervision and guidance of Dr. Douglas Reid. The intern's project was initiated on June 6, 2023, and continued through August 10, 2023 with the objective of designing and developing a commercially-available ground platform to feature different functions suitable for assisting the Hanford cleanup mission.

TABLE OF CONTENTS

LIST OF FIGURES

TRADEMARKS

Clearpath Robotics, Husky, and Husky A200 are registered trademarks of Clearpath Robotics, Inc. Ontario, Canada

The “ROS” Name and other ROS trademarks are property of the Open Source Robotics Foundation (“Open Robotics”)

Arducam Pi and the Arducam Platform are registered trademarks of Arducam, Nanjiang, China

AXIS, AXIS COMMUNICATIONS, ETRAX, ARTPEC and VAPIX are registered trademarks or trademark applications of Axis AB in various jurisdictions.

OUSTER and OS are registered trademarks of Ouster, Inc.

GLOSSARY

CTO	Chief Technology Office
DOE	Department of Energy
FIU	Florida International University
LTS-UGV	Long-Term Surveillance Unmanned Ground Platform
ROS	Robot Operating System
WRPS	Washington River Protection Solutions
SLAM	Simultaneous Localization and Mapping
CTF	Cold Test Facility
ICP	Iterative Closest Point
IMU	Inertial Measurement Unit
GPS	Global Positioning System

1. INTRODUCTION

The Hanford site, located in southeastern Washington State, is the largest of 18 sites involved in the largest nuclear cleanup effort in the world [1]. The site previously played a pivotal role in the development of nuclear weapons during World War II and the Cold War. Selected as part of the top-secret Manhattan Project, Hanford became a sprawling complex dedicated to producing plutonium. The world's first full-scale nuclear reactor, B Reactor, was operational there, contributing to the production of plutonium for the Trinity Test and the bomb dropped on Nagasaki. Throughout the Cold War era, Hanford continued producing nuclear materials for the expanding arsenal. However, the site also generated significant environmental concerns due to radioactive waste [2], leading to ongoing cleanup efforts that initiated in the late 1980s. The Chief Technology Office (CTO) at Washington River Protection Solutions (WRPS) plays a crucial role in supporting the Hanford cleanup mission by driving the development and advancement of technologies that enhance safety and efficiency.

The CTO has begun to explore and refine off-the-shelf robotic systems, including semi-autonomous and fully autonomous robotic platforms that would be deployed for various needs. These platforms offer the potential for personnel-operated, semi-autonomous, and fully autonomous workflows that require appropriate supervision, thereby yielding benefits such as reduced operational costs, decreased exposure risk, and the acquisition of more consistent and reliable data. One such robotic system is The Canary, referring to the Clearpath Husky™ ground platform.

The Clearpath Husky™ is a versatile and rugged robotic platform designed for various applications. It is built to navigate challenging terrains and environments with ease, making it suitable for outdoor and off-road operations. Additionally, the Husky offers flexibility and can be customized with different accessories and payloads to meet specific needs. It provides reliable performance and is widely used across industries such as research, exploration, and monitoring. Previously, the Husky was outfitted with a selection of hardware components specifically optimized primarily for teleoperation with capabilities for semi-autonomous navigation [3] [4].

To enhance its functionality, the platform underwent several improvements to its onboard instrumentation and core functionalities within the platform. The largest improvement was the robots transition from an older version of the Robot Operating System (ROS™) 1, which operates as a framework for developing and controlling robot systems. The improvement from ROS1 to ROS2 significantly [5] improves the robustness of the robot’s onboard software. ROS, as a framework, facilitates a variety of functions that integrate different components onto a network that can be interfaced to control hardware, read and write data from instruments, and introduce robust logic that allows for semi and full autonomy.

With this improvement, considerable changes to the design, implemented systems, and instrumentation were completed. From these changes, the platform demonstrated as a promising solution for long-term operations ranging from autonomous surveillance or teleoperated operations in which this system would support the Hanford Mission. One such task is the autonomous generation of a two-dimensional (2D) spatial radiological map, facilitating the monitoring of radiation levels across a given area while operating the platform remotely.

2. SYSTEM DESCRIPTION

The intended use of the LTS UGV previously focused on the development of the platform through integrating Lidar, cameras, and Geiger sensors to navigate Hanford sites and measure radiation levels to construct radiation maps. Previous efforts focused on the software development with ROS for modeling robot behavior, implementing simultaneous localization and mapping (SLAM) algorithms, and conducting field testing to assess platform robustness; however, the scope of application of the LTS UGV was fundamentally a surveillance tool that enables remote control and semi-autonomous monitoring of various facilities across the site.

As such, efforts refocused on designing the platform with multifaceted performance in mind, in which the robot should be capable of performing various operations, such as enhancing surveillance capabilities and facilitate efficient monitoring of the conditions or operating in a condition that would be dangerous to site personnel that poses no threat to the platform. Furthermore, the platform was designed on CAD to prototype the robot's design and fulfill specific requirements that emphasize user-friendliness, operator safety, and the well-being of facilities and personnel near the robot. Operators should be able to control the robot remotely using a joystick or a similar interface from a remote location and visualize the robot's telemetry without requiring deep technical knowledge of ROS2 or programming. Additionally, the tool should ensure that any issues encountered by the robot can be easily resolved, minimizing downtime and maximizing operational efficiency.

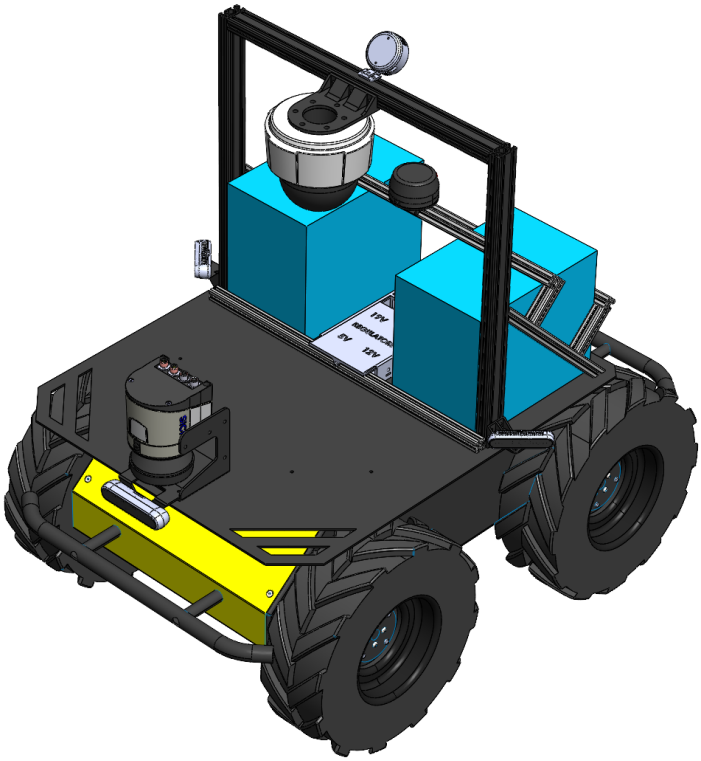

Figure 1: Previous Iteration of the Ground Platform [3] [6]

Figure 2: (Left) CAD Model of Redesigned Ground Platform (Right) Robot Operating Remotely in Hanford Cold Test Facility (CTF)

A. Visual Instrumentation

The platform's camera system was designed to enhance visibility and provide comprehensive observation capabilities while driving the robot. The system comprises fixed two-dimensional cameras and a pan-tilt-zoom (PTZ) camera, each serving distinct purposes for their operational needs. The fixed two-dimensional cameras are positioned on the front, back, and sides of the robot, offering real-time video feeds primarily intended for efficient navigation and precise maneuvering during robot operation. While these fixed cameras are not meant for observation purposes, they play a crucial role in enabling operators to have a clear view of the robot's immediate surroundings, ensuring safe and effective navigation in various terrains and environments.

On the other hand, the PTZ camera is specifically intended for comprehensive observation capabilities. Equipped with pan, tilt, and zoom functionalities, the PTZ camera provides a full 360-degree view of the robot's surroundings. This dynamic observation capability allows operators to monitor the environment from different angles, ensuring comprehensive situational awareness during surveillance and exploration tasks. Operators can control the PTZ camera to zoom in and out, pan left or right, and tilt up or down, enabling detailed examination of specific areas of interest. The PTZ camera serves as a valuable tool for capturing detailed visual information, facilitating efficient decision-making, and providing valuable insights during tasks that require in-depth observation and analysis.

By integrating both fixed two-dimensional cameras for driving the robot and the PTZ camera for observation, the platform's camera system achieves a balance between navigation and situational awareness. Operators can seamlessly switch between different camera views to suit the specific

requirements of each operational phase, optimizing the overall performance and efficiency of the robotic platform. The camera system's versatility and technical capabilities ensure that the robot can navigate safely and efficiently while also enabling comprehensive observation during critical tasks.

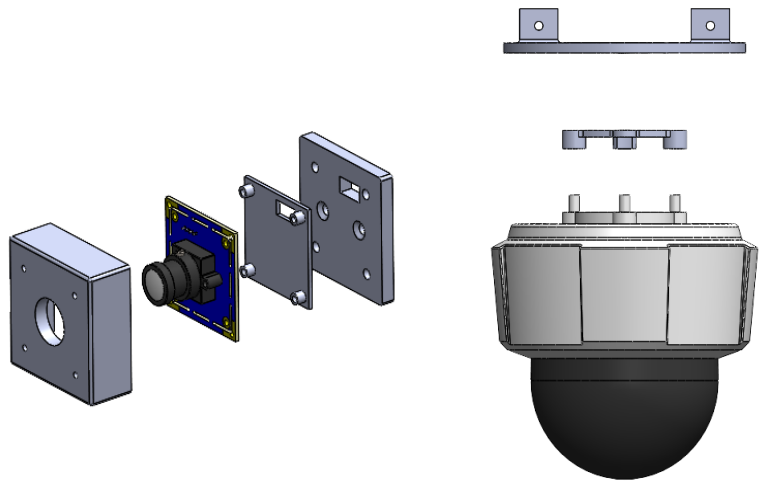

Figure 3: (Left) Fixed Camera Assembly (Right) Pan, Tilt, Zoom Camera

B. State Estimation and Odometry through Sensor Data

In many applications, no single sensor can provide all the necessary information to make informed decisions. Sensor fusion refers to the process of integrating data from various sensors in which data passes through sophisticated algorithms that combines the contributions of each sensor and fuses the information to obtain a unified, coherent, and enhanced representation of the system's state as an output. Odometry, a specific type of state estimation, focuses on estimating the robot's position and orientation based on wheel movement. Analyzing wheel rotations and velocities, odometry provides short-term estimates of the robot's motion, enabling real-time trajectory adjustments and navigation. The odometry for the platform can accurately estimate the position, orientation, and velocity using sensor data from GPS, Inertial Measurement Unit (IMU), and wheel encoders. This fusion of sensor information continuously updates and refines the robot's estimated state, ensuring precise navigation and control in diverse environments as well as generate accurate data of the environment from the Lidar.

Lidar, short for Light Detection and Ranging, is a remote sensing technology that utilizes laser pulses to measure distances to objects or surfaces. It operates on the principle of emitting laser beams and measuring the time taken for the reflected light to return to the sensor. Lidar systems consist of a laser transmitter, a scanner or mirror to direct the laser beam, and a receiver to detect the reflected light. When the laser pulses encounter objects or surfaces, they reflect back to the Lidar sensor, where the time-of-flight is measured. By knowing the speed of light, the system can calculate the distance between the sensor and the object with high precision. By repeating this process rapidly, Lidar systems generate a dense set of distance measurements, creating detailed point clouds that represent the 3D structure of the surroundings.
Additionally, the Lidar can generate additional odometry information that complements the sensor-fused state estimation from GPS, IMU, and wheel encoders. Iterative Closest Point (ICP)

odometry is employed to accurately align and register the successive point clouds captured by the Lidar sensor. Through an iterative optimization process, ICP calculates the relative transformation between two point clouds, providing precise estimates of the robot's motion between scans. In combination with the sensor-fused odometry. Through this combination, the ground platform achieves comprehensive localization and motion estimation where near objects or during operation where the GPS is unavailable, the Lidar can still provide the information to allow the robot to navigate through its surroundings.

Integration of the Lidar also allows for simpler implementation of SLAM – a fundamental process in autonomous systems. SLAM refers to the process by which a robot or an autonomous vehicle simultaneously builds a map of an unknown environment and estimates its own position within that map in real-time. SLAM is a crucial capability for robots operating in unfamiliar or dynamic environments, where accurate mapping and localization are essential for effective navigation and decision-making.

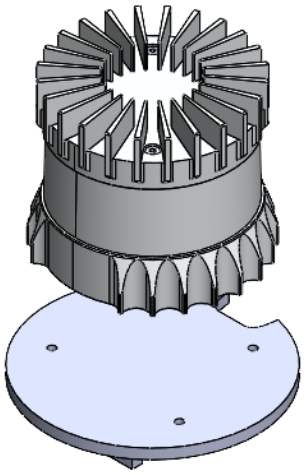

Figure 4: Ouster OS1 Lidar Assembly

C. Interface

ROS is a powerful tool for robotics development, but its ease of use for individuals unfamiliar with Linux or programming varies based on their background and learning curve. As ROS primarily operates on Linux-based systems, some familiarity with the Linux command line is helpful. Additionally, programming knowledge in languages like Python or C++ is beneficial for customizing robot behaviors and extending functionalities.

To address the challenges of initializing, driving, and monitoring the robot, a user interface is being developed alongside the robot's back-end architecture. This design approach aims to enhance the accessibility and usability of ROS for operators with varying levels of technical expertise, making operating the robot and monitoring it as it operates more accessible and intuitive by providing easy-to-use functionalities, enabling operators to perform various tasks such as data capture for analysis, real-time visualization of robot telemetry, and remote robot control without needing to interface via the back-end. Furthermore, the interface integrates the data obtained from the Lidar

sensor to create a map of the environment with detected obstacles and terrain features. This map is updated continuously as the robot explores its surroundings, providing a comprehensive and dynamic representation of the environment. Operators can view this map in real-time, allowing them to monitor the robot's path and ensure safe navigation.

The interface also facilitates data capture, enabling operators to collect information from various onboard sensors and store it for further analysis. This feature is essential for gathering data on radiation levels, environmental conditions, or other relevant parameters during robot surveillance missions. In terms of control, the user interface provides intuitive tools for remotely guiding the robot's movements. Operators can use a joystick or a similar interface to maneuver the robot and set waypoints for semi-autonomous navigation. The interface simplifies the control process, allowing operators to focus on the mission's objectives without the need for extensive knowledge of ROS or programming.

3. TESTING AND RESULTS

A. Testing Plan and Assembly

The testing approach for the LTS-UGV components began with a systematic process of evaluating each element in isolation. This was done to ensure that each component was functioning correctly before being integrated into the larger system. By testing the components individually, any potential issues or weaknesses could be identified and addressed at an early stage, before moving on to the more comprehensive integration phase.

After assessing the individual components, the testing focus shifted to the cameras. Testing the cameras separately allowed for a thorough examination of their individual performance and the quality of the visual data they produced. This step was important for understanding the capabilities of each camera and identifying any potential issues that might arise from their specific characteristics when assembled to the robot. Subsequently, the lidar sensor was tested in isolation. This step aimed to assess the accuracy and data generation capabilities of the lidar sensor. By isolating the lidar, any discrepancies or irregularities in its data could be detected and addressed. This approach ensured that the lidar was functioning as intended and providing accurate data for the system.

Once all the instruments and computers were tested and verified for functionality, the robot was assembled. The robot assembly process adhered to a well-defined installation procedure, commencing with the integration of critical computing units. Once the computing components were successfully integrated, attention turned towards the design and fabrication of mounts tailored for the sensors. These mounts were designed to cater to the unique specifications of each sensor to ensure accurate data collection and smooth incorporation within the robot's architecture. The sensors were then affixed to the mounts and testing on the robotic platform in the field commenced.

The testing process encompassed multiple stages, commencing with an initial trial following assembly. This test involved navigating the robot through diverse pathways devoid of instruments, gauging the robot's connection strength. Building upon the insights gained from this initial test, a subsequent trial was conducted to identify dead zones where the robot experienced intermittent communication loss with the host computer. This trial also examined the robot's proficiency in traversing open spaces with mildly varied terrain. This test also facilitated in determining the optimal path for demonstration. The third phase of testing was centered on evaluating the configuration of cameras and lidar with the associated computing units, with the aim of optimizing data transmission methods.

B. Communications

After the robot was constructed Utilizing a point-to-point (PtP) connection, the robot establishes a local link with the base station computer. This communication method employs two antennas as endpoints for the transmission of data between the robot and the base station. This PtP configuration enables the seamless exchange of telemetry data in both directions where information from the robot, including camera feeds, GPS status, and instrument readings, can be efficiently transmitted to the base station, and conversely, the base station can issue control

commands to the robot through this same communication channel, facilitating prompt operational adjustments and seamless coordination.

In the first phase of testing, the robot's communication performance was evaluated during its navigation within the Cold Test Facility (CTF) without any onboard instrumentation. This initial set of trials focused on assessing the robot's basic mobility using the base platform without any onboard instruments. The primary aim was to navigate the robot around the simulated single shell tanks within the facility while determining the optimal location for the peer-to-peer antenna. This strategic placement ensured consistent and reliable communication between the robot and the host computer. Figure 5 shows a satellite view of CTF, in which (a) the robot followed a trajectory around the tank, (b) the robot followed a trajectory around a kaolin waste trough, and (c) the robot the followed a trajectory over the hill and into the visitor parking lot and warehouse. The orange waypoint is where the robot was controlled and the red waypoint is where the PtP antenna was positioned.

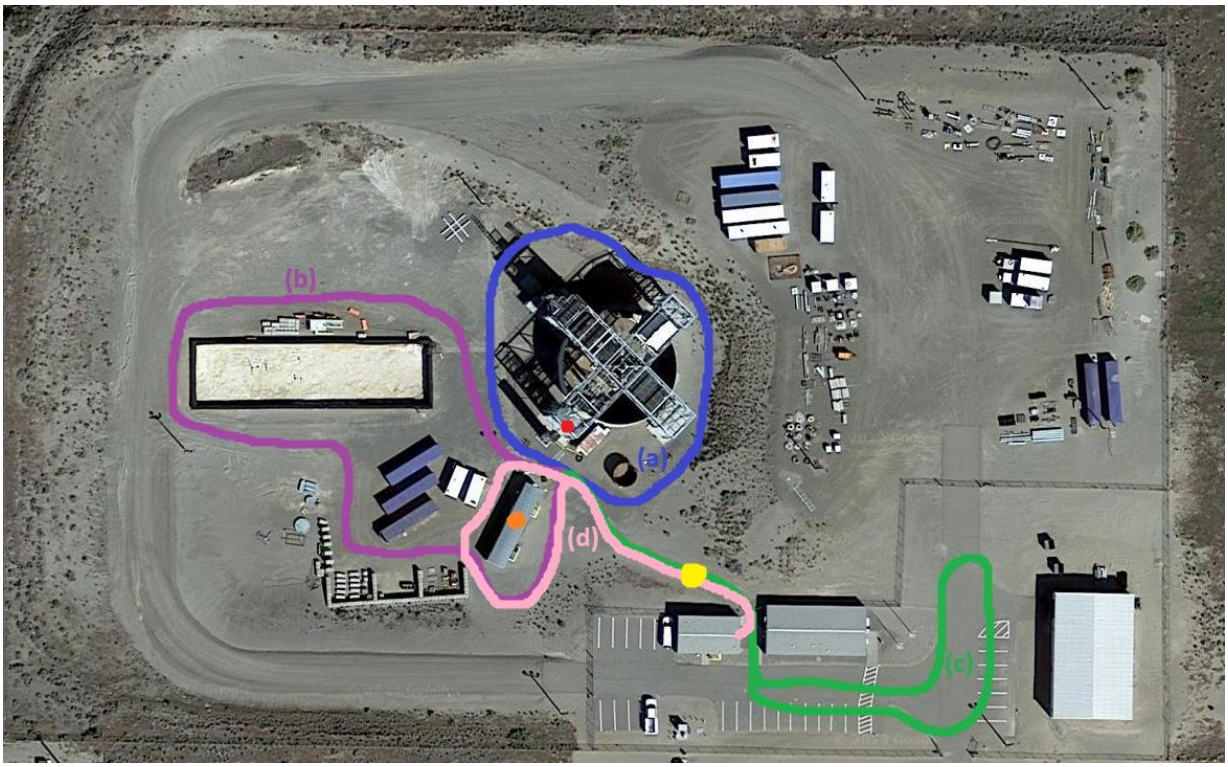

Figure 5: Satellite Image of CTF and the test trajectories for the ground platform.

Following the results of the preliminary communications test, the test plan targeted the identification and mitigation of potential dead regions within the communication coverage. These dead regions represented areas where the robot's ability to communicate with the host computer could be compromised. By carefully analyzing these regions, measures were implemented to block them off, thus eliminating communication blind spots and guaranteeing continuous data exchange between the robot and the computer throughout the testing environment. In each test, the routes had a couple of regions of dead space where the robot was unable to communicate; these locations were: (a) behind the tank, (b) behind the kaolin trough, and (c) on the far side of the office building.

From this, an evaluation was made on the optimal path that the robot could feasibly be demonstrated, shown by path (d) on Figure 5.

C. Visual Instrumentation

In each communication trial involving the robot, the rate of data transmission was constrained by the speed at which information could be effectively exchanged. The point-to-point connection established through antennas necessitated an uninterrupted line of sight between the endpoints for optimal functionality. However, this configuration resulted in a noticeable reduction in the transmission rate when encountering areas with obstructed views of the antennas. This reduction is especially noticeable when transmitting dense information such as a video feed and Lidar point cloud. When testing the visual instrumentation for the robot, a key challenge emerged in devising a data transmission strategy that accommodated the complete telemetry of the robot, including all five camera feeds, as well as the issued commands. The solution revolved around segmenting the data into smaller packages, ensuring a fluid transmission process that mitigated potential bandwidth bottlenecks.

The video feed system involved segregating the driving cameras on the robot into two distinct machines, both interconnected within their own, isolated local network. The primary computer, responsible for executing commands from the base station, received video feeds from the four fixed 2D cameras mounted on the robot. These feeds were subsequently relayed to a secondary computer, where they underwent encoding and compression to significantly reduce the data size. This secondary computer was responsible for compressing the video feeds received from the primary computer. The compressed feeds were then published, enabling the base station to subscribe to and access the post-processed video data.

In addition to this setup, the Pan-Tilt-Zoom (PTZ) camera functioned autonomously, equipped with its own encoding and decoding capabilities. This camera operated independently from the two computers mentioned earlier. The resultant video feed was accessible through real-time streaming protocol (RTSP) addresses, providing a means for seamless and timely access to the captured video data. In Figure 6, a basic user interface that shows the camera feed from all sides of the robot can be seen, located on the access hill indicated by the yellow waypoint in Figure 5, and the top diagram on Figure 6.

Figure 6: (Top) Navigation of the robot from the access hill of CTF. Yellow waypoint indicates position of robot, and arrow represents robot orientation (front); (Bottom) Views from the omnidirectional camera assembly: front view (top left), rear view (top right), right view (bottom left), and left view (bottom right).

The Lidar assumes a pivotal role in furnishing the robot with crucial insights into its surrounding environment, particularly in identifying obstacles. Linked to the primary computer, the Lidar achieves this by generating a dense point cloud comprising millions of points per second. This point cloud is subsequently subjected to another compression process known as voxelization, a process that translates the three-dimensional data into a two-dimensional plane, facilitating an estimation of depth. This process holds significance in furnishing the robot with information about obstacles located beneath the Lidar's inherent 2D scanning plane, which would remain otherwise undetected if exclusively using the 2D scanning plane. The resultant voxelized point cloud is disseminated as a costmap. A costmap is complementary information provided to the robot that provided additional context to the proximity of the obstacles that surround it. This essentially

operates as an obstacle avoidance navigational map [7], elucidating the robot's ability to safely traverse specific regions without venturing into hazardous proximity with objects. This intricate process of data acquisition, voxelization, and costmap generation enables the robot to execute more informed and secure navigation through its environment.

Moreover, the Lidar data also is seamlessly generated in real-time as the robot executes its operations. This data is automatically stored on the primary computer, ready for upload to the base station computer post-operation. This functionality not only facilitates data storage but also supports efficient data management without real-time analysis of the data onboard the robot, which would drastically reduce network performance. Once downloaded, the collected data can be readily accessed, offering the capacity for detailed visualization, thorough analysis, and comprehensive post-processing. This iterative process, when repeated across multiple instances, contributes to the compilation of an evolving historical record of the facility that the robot has monitored. Figure 7 represents the map resulting from CTF exploration is depicted, generated through the utilization of the onboard Lidar on the platform. During the map generation process, a significant challenge that emerged was the occurrence of dead reckoning issues. These issues arise due to reliance on the robot's odometry for mapping accuracy [8]. The precision of all odometry sources is crucial for ensuring a precise map creation process. Deviations or inaccuracies in any of the sensors that contribute odometry data can lead to errors during the generation of extensive maps. The specific regions affected by dead reckoning errors are also illustrated in Figure 8, providing visual insight into this challenge.

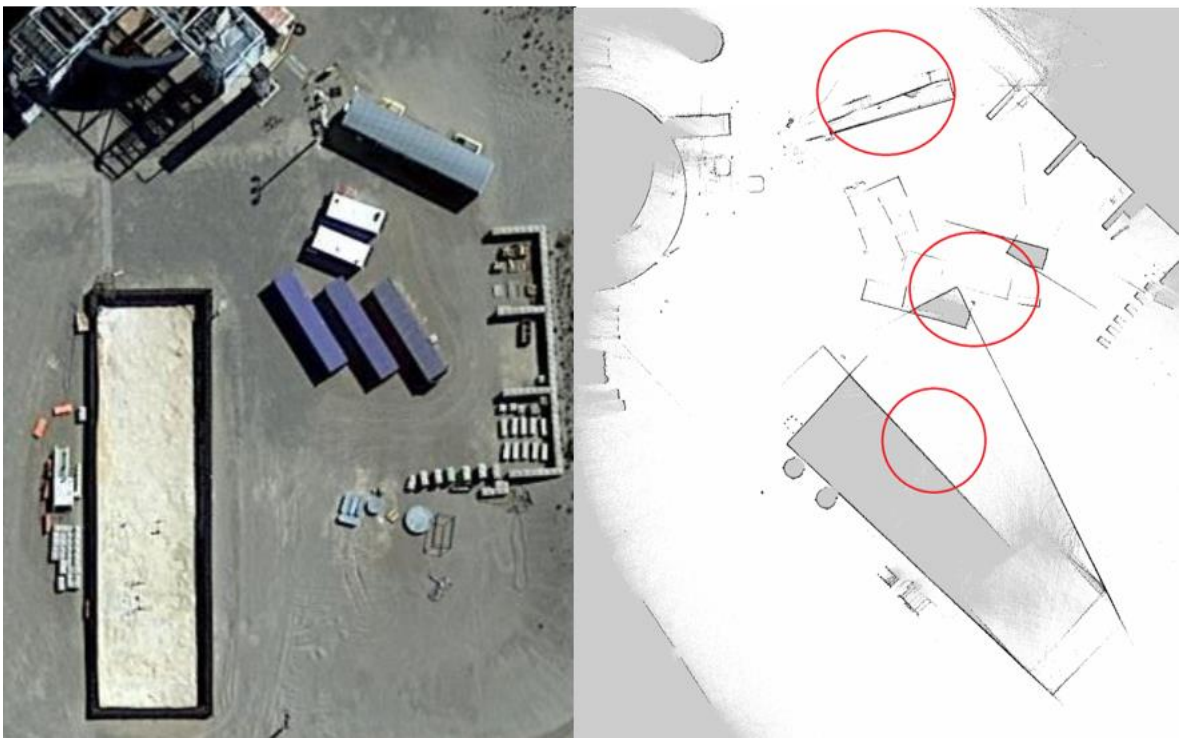

Figure 7: (Left) Satellite Region of Test Area (Right) Mapped Region of Test Area

D. Robot Semi-Autonomy

Leveraging costmaps derived from the voxelized point cloud, the robot employs the ROS2 Navigation2 stack, a comprehensive toolkit enabling semi-autonomous and fully autonomous exploration through path planning. Path planning involves the robot estimating its trajectory by amalgamating costmaps and odometry data. The ROS2 Navigation2 stack caters to diverse navigation scenarios, with frontier-based and waypoint-based navigation being the most prevalent. In frontier-based navigation, the robot undertakes trajectory planning without explicit instructions. The Navigation2 package guides the robot's movements solely based on data from the costmaps. Concurrently, real-time creation of a 2D map akin to the one depicted in Figure 7 is achievable.

On the other hand, in waypoint-based navigation, predetermined waypoints dictate the robot's movements. While following these waypoints, the system maintains obstacle detection and avoidance capabilities. It's essential to note that this system is not yet integrated into the robot's hardware but has been validated through a proof-of-concept simulation, as demonstrated in Figure 8. In this simulation, a compact platform underwent testing in a simulated environment. A waypoint was introduced into the navigation stack, controlling the robot's autonomous movement while circumventing obstacles while it travelled to the specified destination. This simulation attests to the feasibility of the planned navigation approach. In future works, this technology will be deployed to the LTS-UGV for testing in various facilities at Hanford.

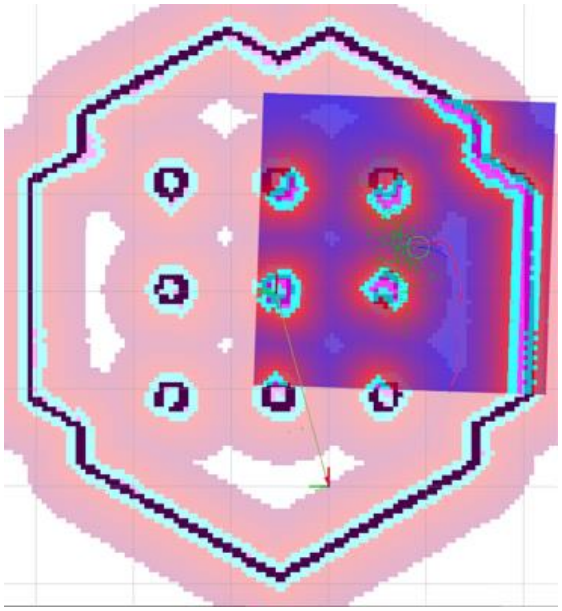

Figure 8: Autonomous Navigation of a simulated low profile ground platform via the Navigation2 stack.

4. FUTURE WORKS

The LTS-UGV underwent a successful demonstration at CTF, engaging various engineering groups at WRPS. The presentation showcased wireless teleoperation through camera feeds and initial mapping activities. The participating groups had the opportunity to inspect the robot's internal components and proficiently navigate it using the joystick controls. Illustrated in Figure 9, the demonstration captured the audience's attention as the platform was driven downhill.

Figure 9: Onlookers during the LTS-UGV product demonstration at CTF.

Given the platform's adaptable design, the feedback from these groups was critically analyzed and discussed. A primary aspect highlighted during the demonstration pertained to the missions that the LTS-UGV could be deployed onto. One of the fundamental features of the LTS-UGV is its ability to be used in a variety of different applications, such as operating in a field in which more diverse sensors like IH vapor samplers and gamma spectrometer units could be used. Additional recommendations for the robot was in equipping the LTS-UGV with an extendable tool or mounted arm to facilitate immediate air monitoring or swab sampling capabilities. This extension would enable the robot to perform tasks such as monitoring air quality or collecting samples from areas that might be challenging to access otherwise. Lastly, feedback emphasized the necessity of steering clear of fan-based cooling mechanisms, considering the prevalent dusty environments at Hanford, where the risk of airborne contamination is significant. This ties in with weatherproofing measures to facilitate efficient decontamination efforts.

In another discussion, scalability, ground clearance, traversal capabilities, and were also discussed. Fundamentally, the LTS-UGV’s modularity facilitates scalability in which the robot’s core framework and payloads can be transferred to a larger or smaller platform. This allows the device to address different areas in which the deployment of the LTS-UGV technologies would be more suitable on a different sized platform. Additionally, the consideration of utilizing tracks to augment the soft-surface traversal capacity, particularly in sandy or snowy terrains, was suggested. Cautious

attention to the terrain to mitigate potential impacts on critical infrastructure – such as cables - that the treads might encounter while traversing was noted. An alternative that complements the platform's ability to traverse is the exploration of dune-style tires, characterized by cupped treads, which could potentially enhance the robot's ability to navigate fine sand. Lastly, increasing the ground clearance has emerged as a viable strategy to prevent instances of high centering on objects such as tumbleweeds and sagebrush, ensuring seamless mobility across diverse terrains.

Finally, a key consideration for the LTS-UGV's design is ensuring user-friendly serviceability. It was recommended that a comprehensive service manual be made available, focusing on field maintenance procedures and the seamless replacement of components. The design should facilitate efficient component hotswaps, allowing operators to swiftly replace malfunctioning parts without prolonged downtime, ensuring the robot's operational continuity.

5. CONCLUSION

The Chief Technology Office, in collaboration with Florida International University (FIU) developed the Long-Term Surveillance Unmanned Ground Vehicle (LTS-UGV), a solution engineered to advance the surveillance and monitoring of nuclear facilities. Created to amplify the Hanford Cleanup Mission, the LTS-UGV offers a user-centric approach, enabling operators to control the robot remotely without the need for specialized training. Its adaptable design supports various payloads, seamlessly aligning with deployment requirements. An effective demonstration showcased adept remote-control capabilities, with operators able to steering the robot using a joystick from a secure remote location for precise navigation. Its comprehensive visual coverage was achieved through an array of 2D cameras and a PTZ camera, ensuring a full 360-degree field of view for enhanced navigation and observation. Leveraging advanced data collection technologies, the LTS-UGV effectively utilized sensor data, integrated lidar for obstacle detection, employed IMU for inclination assessment, and provided real-time GPS location updates. The user interface seamlessly integrated with the intuitive Robot Visualization (Rviz) software, facilitating straightforward visualization of camera data and robot telemetry.

Building on the success of the demonstration, the continuous development plan for the LTS-UGV encompasses advancements including progressing towards semi and full autonomy by utilizing onboard sensor data for informed decision-making, enhancing vision with complementary depth and tracking cameras for fortified GPS signals, extending data collection capabilities to encompass radiation mapping and hazardous vapor detection, introducing a customized user interface for seamless interaction with sensor data and robot telemetry, ensuring platform scalability for improved access to various terrains, and implementing system enhancements such as improved cooling, weatherproofing, and shielding to bolster overall robustness and reliability.

6. REFERENCES

[1] U.S. Department of Energy Office of Environmental Management, "Cleanup Sites | Department of Energy," [Online]. Available: https://www.energy.gov/em/cleanup-sites.

[2] U.S. Department of Energy, "Hanford Cleanup Overview," December 2022. [Online]. Available: https://www.hanford.gov/files.cfm/Hanford_Cleanup_Overview_Fact_Sheet_Dec2022.pdf. [Accessed 26 June 2023].

[3] J. Natividad, A. Pappas, R. Gudavalli and L. Lagos, "Autonomous Navigation and Radiation Mapping Platform – Hardware Updates and Integration," 10 December 2021. [Online]. Available: https://fellows.fiu.edu/wp-content/uploads/2021/12/Natividad-2021-Summer-Internship-Tech-Report.pdf. [Accessed 18 July 2023].

[4] J. Adams, A. Pappas, R. Gudavalli and L. Lagos, "Development of Semi-Autonomous Robotic Platform for Mapping Radioactive Hanford Farms," 10 December 2021. [Online]. Available: https://fellows.fiu.edu/wp-content/uploads/2021/12/Adams-2021-Summer-Internship-Tech-Report.pdf. [Accessed 18 July 2023].

[5] T. Dirk, "Changes between ROS 1 and ROS 2," September 2015. [Online]. Available: https://design.ros2.org/articles/changes.html. [Accessed 18 July 2023].

[6] T. Tran, A. Pappas, R. Gudavalli and L. Lagos, "Autonomous Navigation and Radiation Mapping Platform - Radiation Sensor Package Development," 10 December 2021. [Online]. Available: https://fellows.fiu.edu/wp-content/uploads/2021/12/Tran-2021-Summer-Internship-Tech-Report.pdf. [Accessed 18 July 2023].

[7] Open Navigation LLC, "Navigation Concepts - Navigation 2 1.0.0 documentation," 2020. [Online]. Available: https://navigation.ros.org/concepts/index.html. [Accessed 7 August 2023].

[8] M. S. A. Khan, S. S. Chowhurdy, N. Niloy, F. T. Zohra Aurin and T. Ahmed, "Sonar-based SLAM Using Occupancy Grid Mapping and Dead Reckoning," in *TENCON 2018 - 2018 IEEE Region 10 Conference*, 2018.